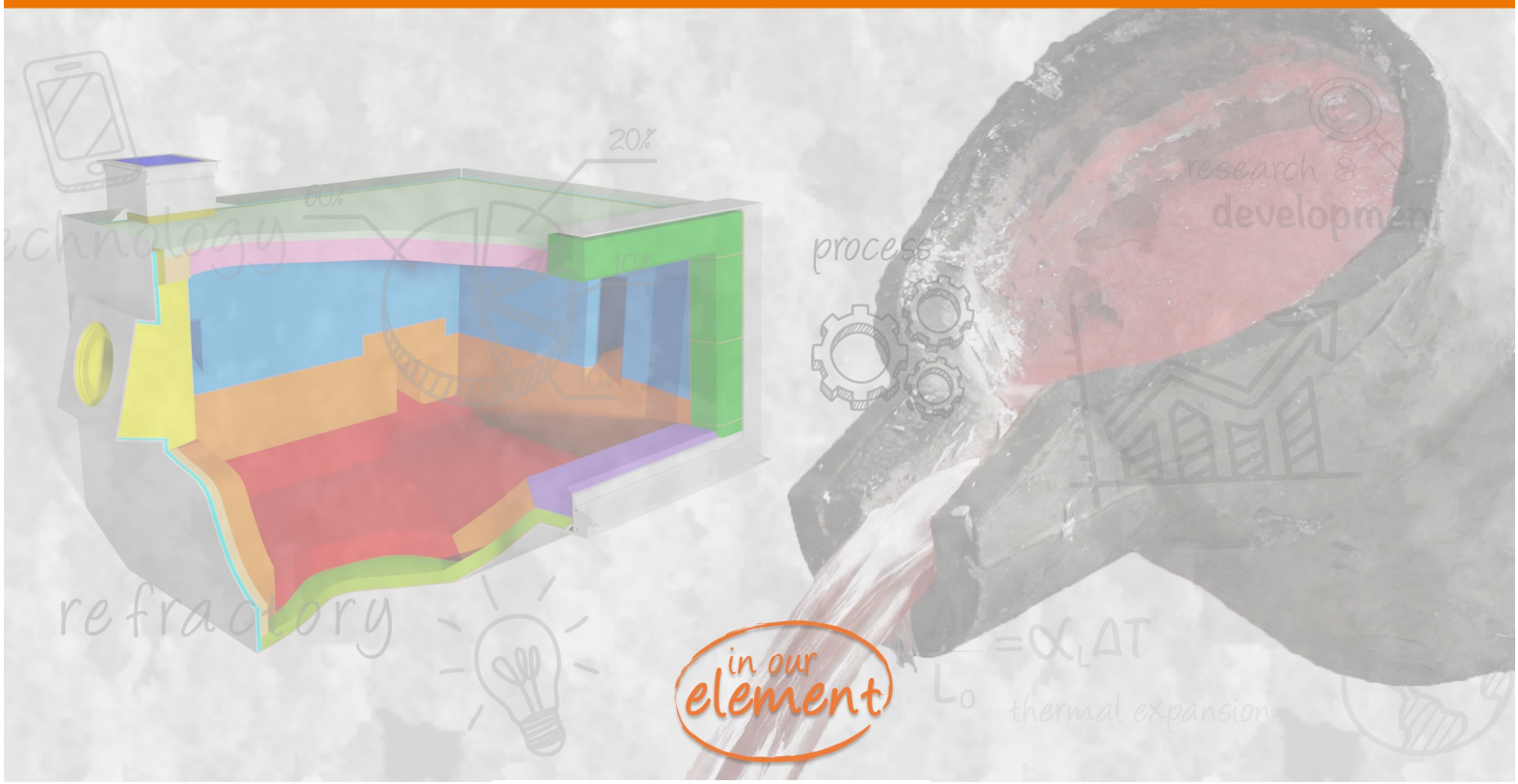

REFRACTORIES FOR ALUMINUM

ALLIED MINERAL PRODUCTS

Global **Refractory** Solutions

Corporate Headquarters: Columbus, Ohio, USA | +1-614-876-0244 | alliedmineral.com

ABOUT ALLIED

Allied Mineral Products is a world leader in the design and manufacture of monolithic refractories and precast shapes. With strong sales and service teams in the foundry, aluminum, steel, heat treat/forge and industrial markets, our success is based on our dedication to *Being There Worldwide with Refractory Solutions.*

Producing quality, consistent products is top priority at Allied and we have the products to meet your refractory needs. Our extensive product line includes innovative refractory technology and longstanding refractory alternatives.

Allied's focus on quality at every stage in the production process is unparalleled. A stringent raw material standard and global quality control testing before and after each batch is produced, provides customers with consistent products. We provide quick response times to any urgent request through flexible manufacturing systems at all our manufacturing facilities.

Global Refractory Solutions

RESEARCH & ENGINEERING

After gaining a detailed understanding of your specific needs, our team evaluates operating criteria and physical design parameters to create a detailed engineered design encompassing:

- Patented technologies
- Optimized product zoning
- Thermal models to optimize and validate designs
- Proven safety lining system designs
- Unique installation properties and techniques
- Leading edge refractory system designs

We're focused on developing new products, improving existing products and perfecting installation techniques. Our product development and testing is conducted in our state of the art research and technology center. We have an on-site gunning and shotcreting lab allowing extensive testing of installation properties.

As an innovative, technology-driven supplier we're devoted to providing customized refractory solutions for various industry operations. We offer a wide variety of high performance refractory products with superior raw material quality.

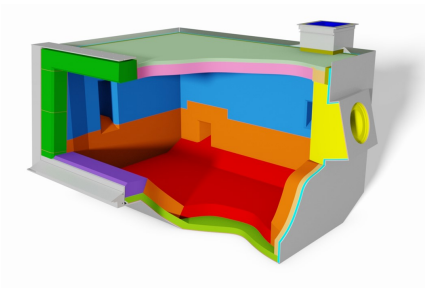

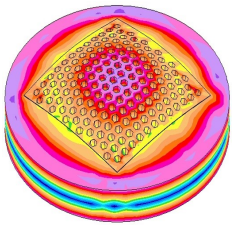

FEA Thermal Analysis

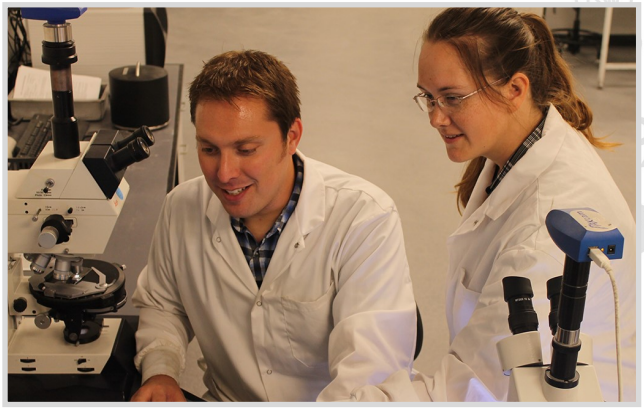

Flow Testing

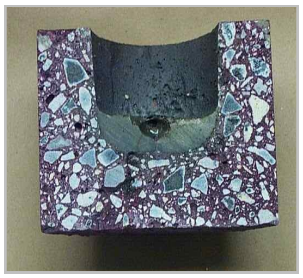

Contact Tests

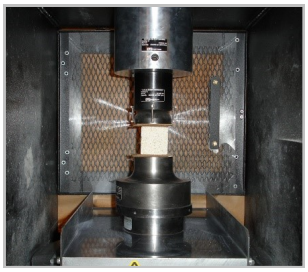

Strength Tests

PRODUCT INNOVATIONS

QUICK-FIRE®

Product line benefits

- Rapid dry-out characteristics
- Designed to bond to existing refractory
- Fast setting properties
- Excellent non-wetting characteristics
- Superior thermal shock resistance
- Available in gunning formulations
- Global availability

MATRIFLO

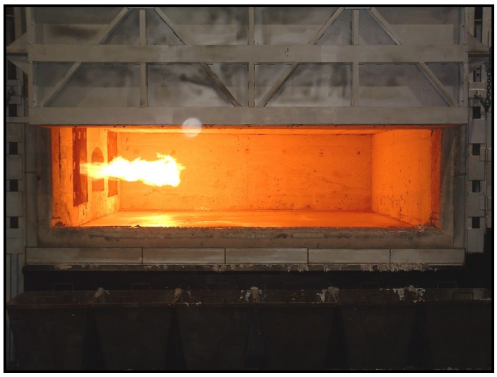

Allied's MATRIFLO product line is high alumina, low cement castables that are specifically designed for aggressive aluminum alloys

- Provides superior corrosion resistance
- High strength
- Excellent non-wetting properties
- Resistant to salt flux

	MATRIFLO AL C	MATRIFLO 85 ACX
Al_2O_3	85.3 %	85.6 %
CaO	2.1 %	2.3 %
SiO_2	8.4 %	8.5 %
Density	2.82 g/cm^3 (176 lb/ft^3)	2.74 g/cm^3 (171 lb/ft^3)
Grain size	25 mm (1 inch)	8 mm (5/16 inch)

REVERBERATORY

ROOF

- MATRIPUMP AR 61
- MATRIPUMP 50
- MATRICAST 3110C

UPPER SIDE WALLS

- MATRIPUMP AR 61
- MATRIPHOS 85AC
- QUICK-FIRE® 88

BURNERS

- LCF 798A
- KAST TECH 60
- QUICK-FIRE® 88
- MATRIPHOS 85AC

JAMBS / LINTELS

- QUICK-FIRE® 88
- QUICK CAST® 62
- ARMORMAX® 70SR
- TUFF-FLO 608

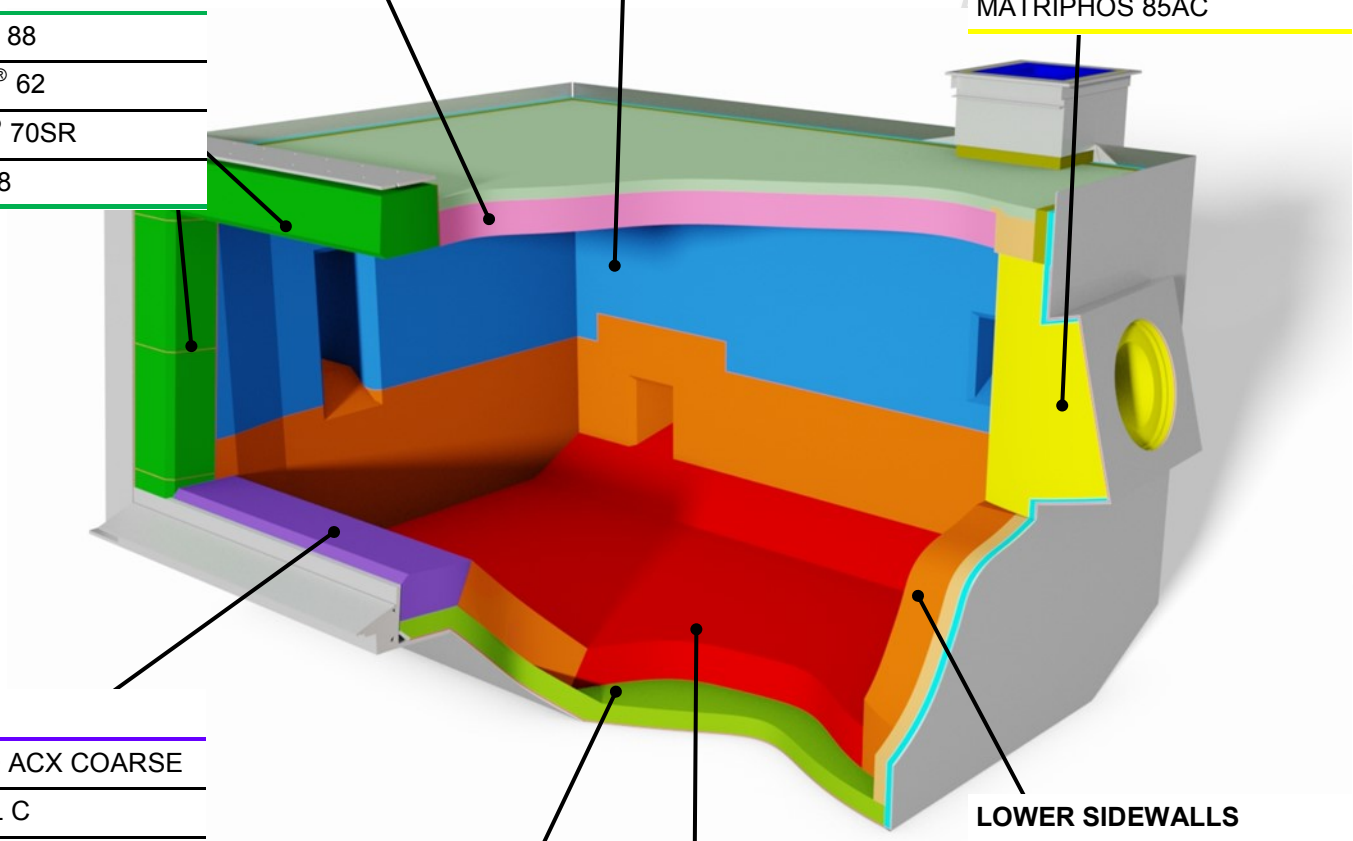

RAMP / SILL

- MATRIFLO 70 ACX COARSE
- MATRIFLO AL C
- QUICK-FIRE® 90
- MATRIFLLO 85 ACX

LOWER SIDEWALLS

- MATRIFLO 85 ACX
- MATRIPUMP 72 ACX
- QUICK-FIRE® 88

SUBHEARTH

- MATRICAST 2600 AC
- MATRIGUN 25 ACX
- MATRIPUMP 45 AL
- BETAMAX 24 LT

HEARTH

- MATRIPUMP 63 ACX
- MATRIPUMP 70 ACX
- MATRIPUMP 72 ACX
- MATRIFLO 85 ACX

STACKMELTER

STACK

- ARMORMAX 70 SR (upper)
- MATRIFLO 85 ACX
- MATRIFLO 93 AC
- MATRIPUMP 72 ACX
- QUICK CAST® 61 ACX

BURNERS

- KAST TECH 60
- LCF 798A
- MATRIPHOS 85 AC

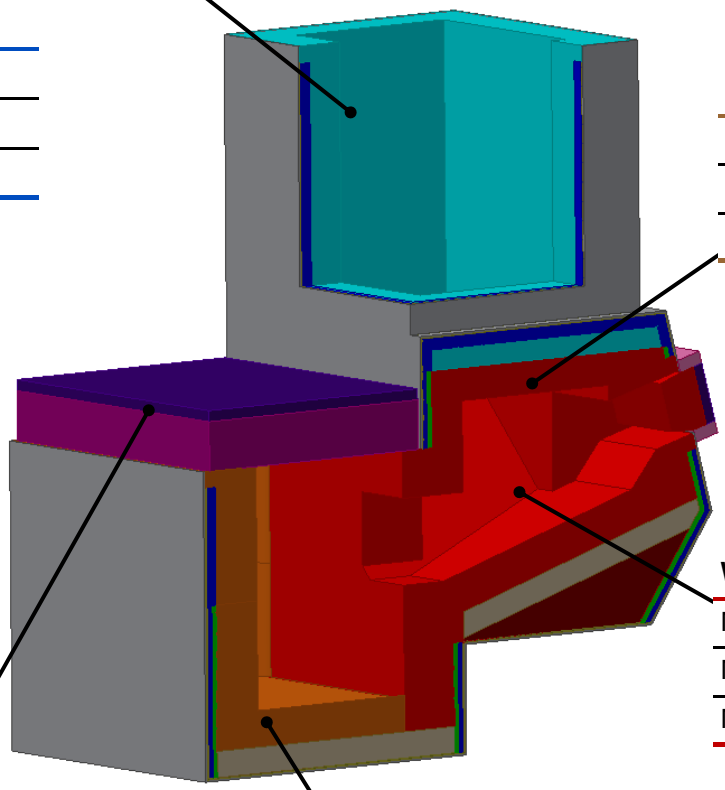

ROOF

- KAST TECH 60
- MATRIPUMP AR 61
- QUICK CAST® 62

WALLS / HEARTH / RAMP

- MATRIFLO 85 ACX
- MATRIPUMP 72 ACX
- MATRIFLO 93 AC

ROOF

- MATRIPUMP 50
- MATRIPUMP AR 61
- KAST TECH 60

HEARTH & WALLS

- QUICK CAST® 61 ACX
- QUICK-FIRE® 88
- MATRICAST 70 AC

DIE CASTING HOLDER

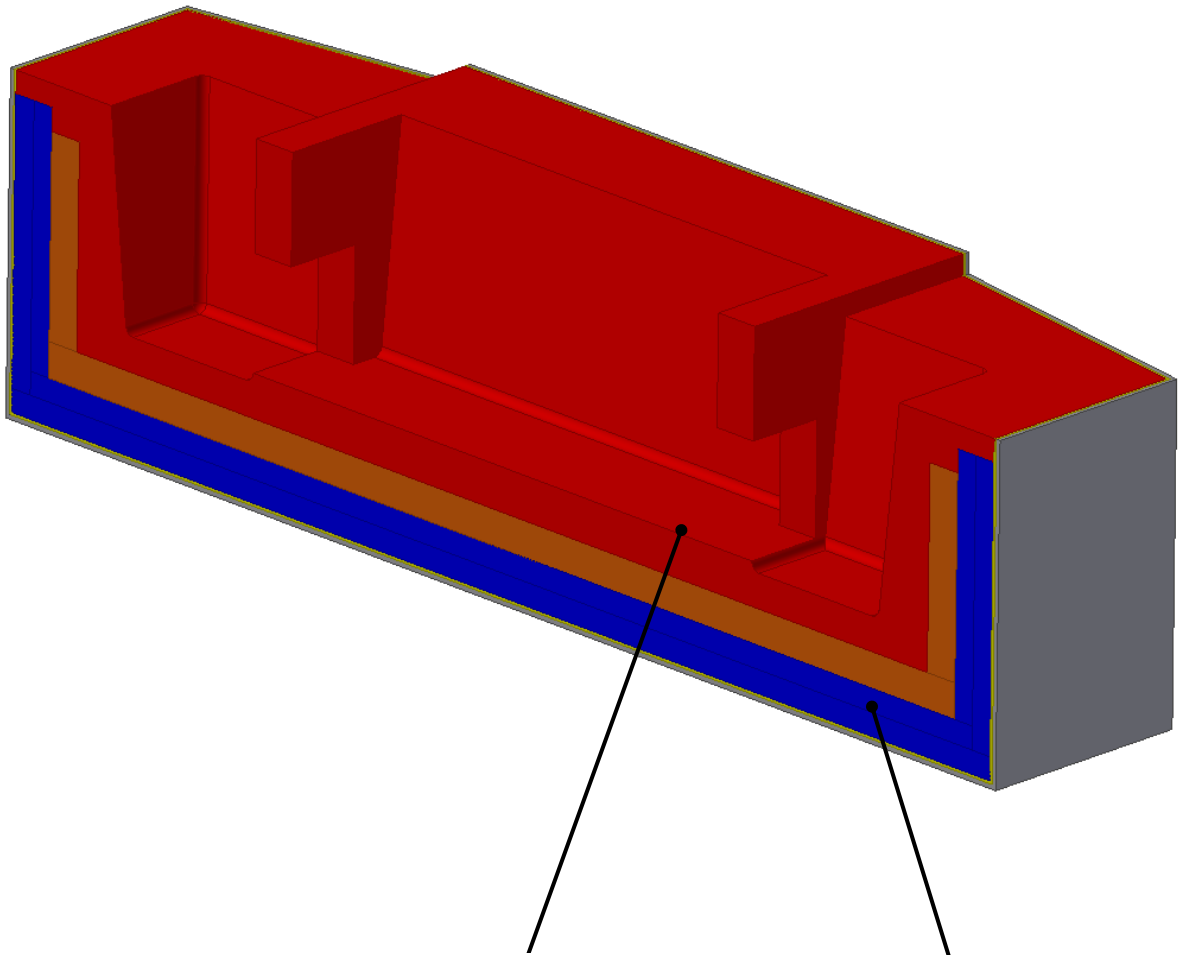

FURNACE LINING	SAFETY LINING
MATRIPUMP 63 ACX	DRI-LITE® 79AL-M
MATRICAST 70 AC	BETAMAX 24 LT
MATRIFLO 85 ACX	
QUICK-FIRE® 88	

ROTARY

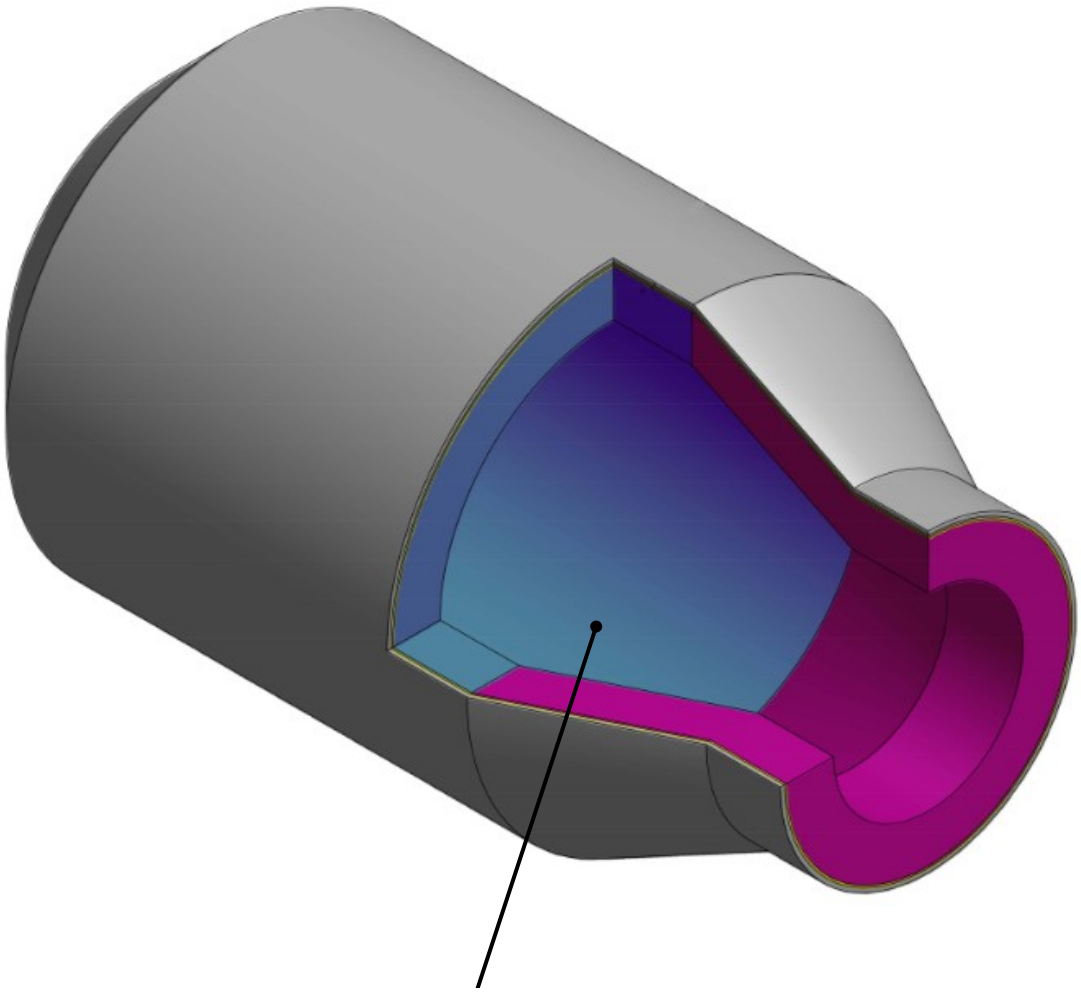

FURNACE LINING

QUICK CAST® 61 ACX

NANO-TEK 65 AC

CORELESS

SPOUT

- MATRIFIRE® 8085 ACX
- MINRO-AL® PLASTIC A76
- MINRO-AL® PLASTIC A85
- QUICK-FIRE® 88
- PRECAST SHAPES

COVER

- MINRO-FIRE CAST F80
- TUFF-FLO 50

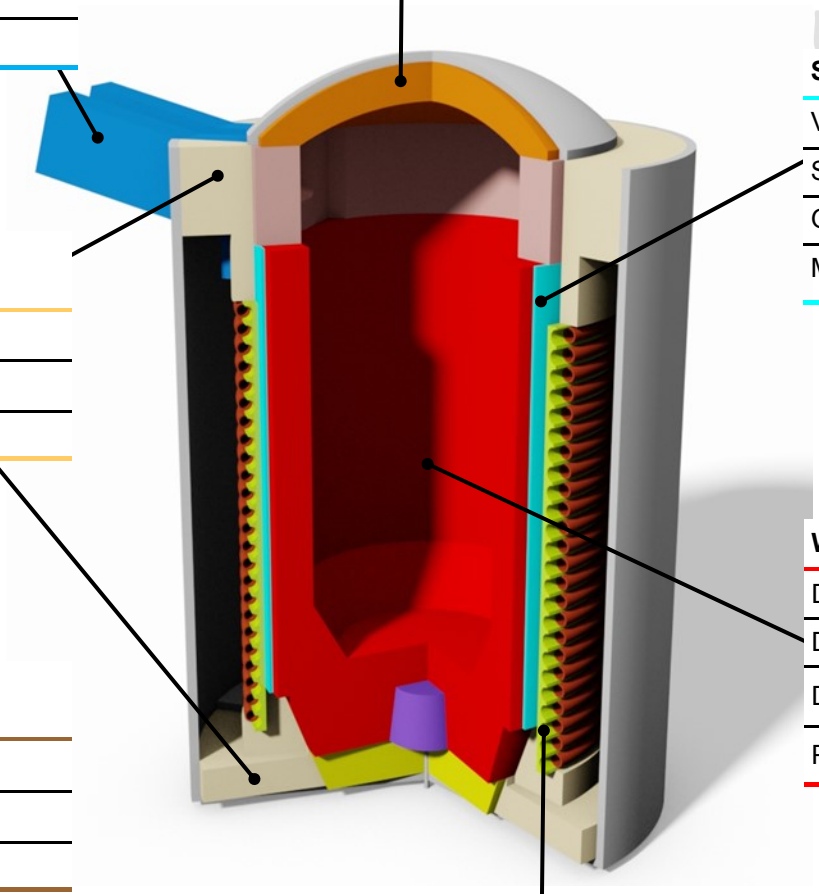

SLIP PLANE MATERIALS

- VAPORSHIELD
- SINTERFOIL 50
- GM40SRP
- MINRO-WEAVE CLOTH

STRUCTURAL COMPONENTS

- QUICK CAST® 62
- TUFF-FLO 50
- PRECAST SHAPES

WORKING LINING

- DRI-VIBE® 520A
- DRI-VIBE® 522A-FR
- DRI-VIBE® 558A-FR
- PRECAST CRUCIBLES

WORKING LINING COATINGS

- MINRO-Z WASH Z77
- MATRIKOTE 90 AC
- WASH 148A

CRUCIBLE BACK-UP

- DRI-VIBE® 88A NB
- DRI-VIBE® 291A

GROUT

- GROUT 163 ACF
- GROUT 563A
- GROUT 663A
- COIL-CAST 97A

CHANNEL

RECIEVER / SPOUT

- MATRIFLO 85 ACX
- MATRIPUMP 72 ACX
- MATRICAST SiC

COVER

- INSULITE® 33100
- MATRIPUMP 50
- MINRO-FIRE CAST F80

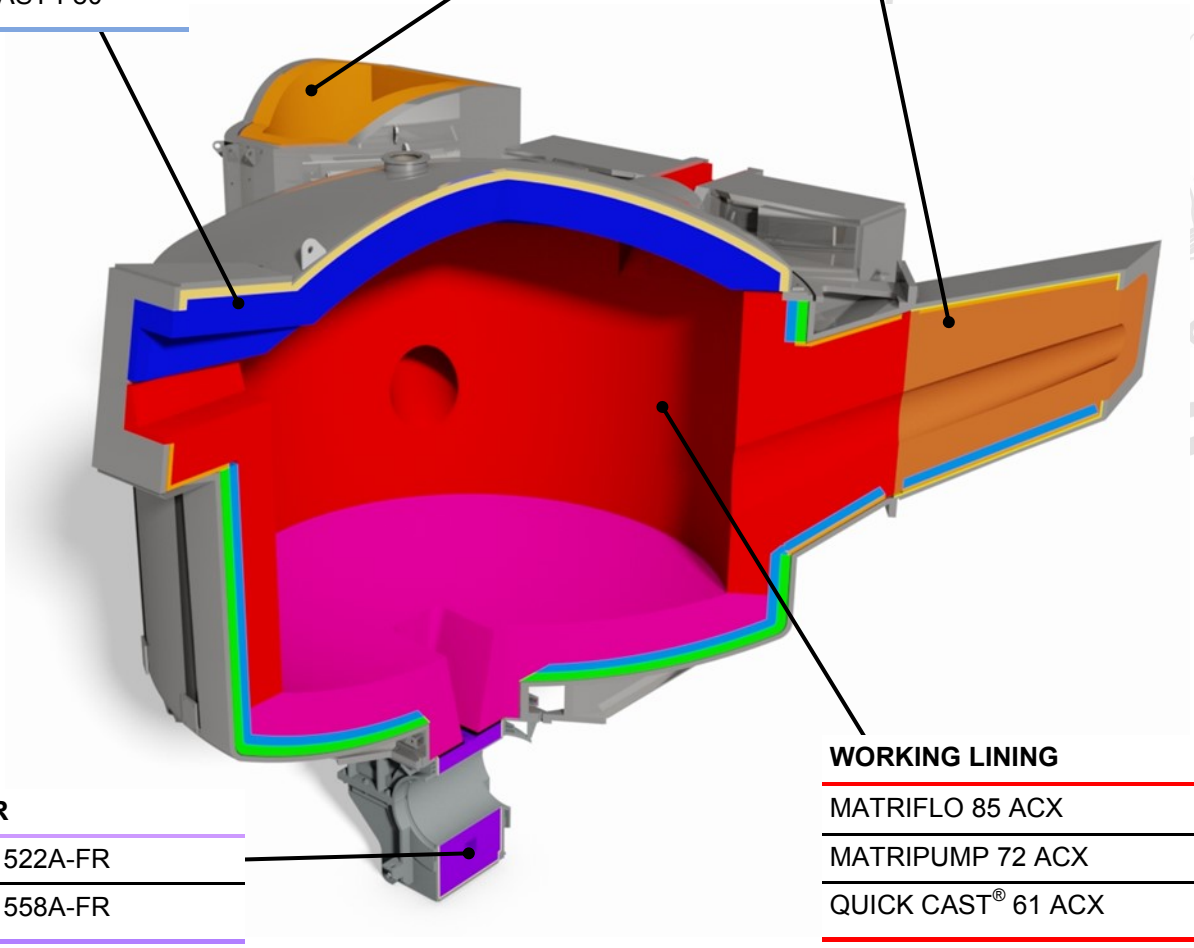

INDUCTOR

- DRI-VIBE® 522A-FR
- DRI-VIBE® 558A-FR

WORKING LINING

- MATRIFLO 85 ACX
- MATRIPUMP 72 ACX
- QUICK CAST® 61 ACX

TRANSFER LADLES

HEATED LAUNDER

WORKING LINING

- MATRIFLO 85 ACX
- QUICK-FIRE® 88
- QUICK CAST® 61 ACX

BACK-UP LINING

- DRI-LITE® 79 AL-M
- BETAMAX 24 LT

COVER

- BETAMAX 26 LT

UNHEATED LAUNDER

BACK-UP LINING

- DRI-LITE® 65 A-L
- DRI-LITE® 79 AL-M

WORKING LINING

- MATRISIL CV
- MATRISIL LC
- MATRISIL SR

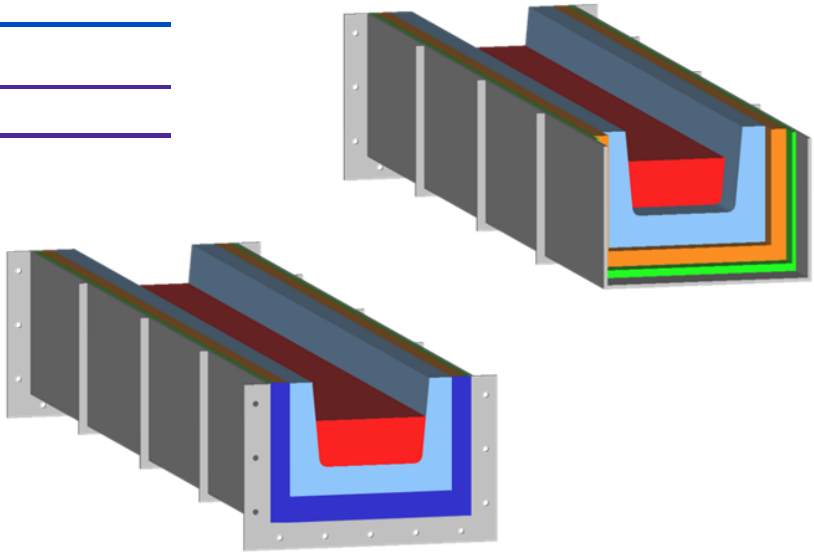

LADLES

REPAIR

- QUICK-FIRE® PATCH B
- QUICK-FIRE® PATCH M

COATINGS

- MATRIKOTE 90 AC
- MINRO-Z WASH Z77

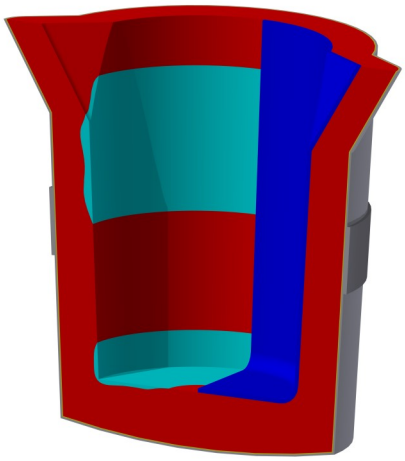

WORKING LINING

- QUICK CAST® 61 ACX
- MATRICAST 82 SiC
- BETAMAX HS LT

FLOORING

TUFFLOOR is designed for areas exposed to extreme thermal cycling and intermittent exposure to liquid metal spills, dross and slag. It is a versatile product that can be installed as a complete floor, over existing (or new) concrete, or as precast tiles.

TUFFLOOR has over 20 years of proven performance in ferrous and non-ferrous foundries, primary metal production facilities (aluminum, steel, iron, zinc, copper, ferro-alloys), rolling mills and many other hot flooring applications.

Benefits include:

- Fast project turn around time due to its early strength development
- Exceeds the cold crushing strength of conventional concrete
- Reduced maintenance time and expense
- Safer working surfaces
- Minimizes wear on mobile equipment
- Custom colors available
- Excellent freeze-thaw properties

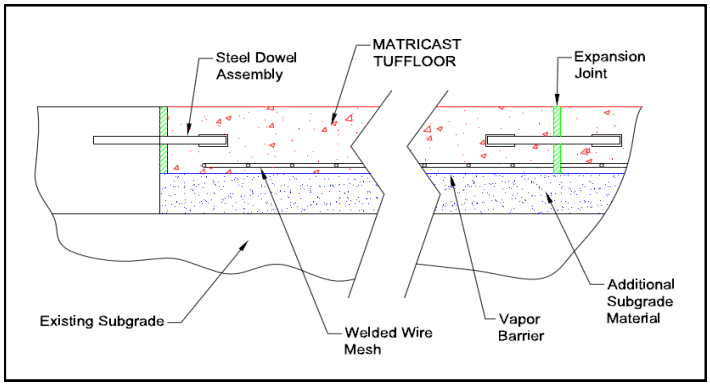

Engineering Design for a High-Load Application

A variety of colors available

TUFFLOOR **Standard Concrete**
Thermal Cycling to 1400°F (760°C)

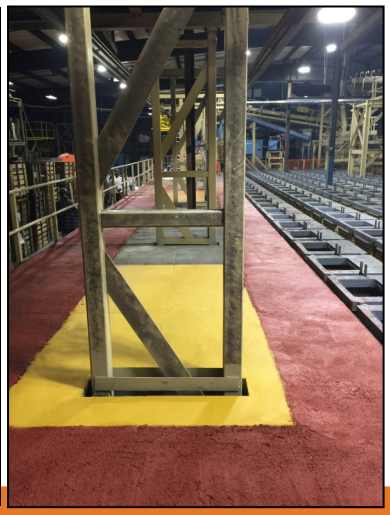

MAINTENANCE

DRI-CAST	Dry powder product line, designed for patching fractured / worn refractory.
MATRIFLO	Specialty line of metal contact castables.
MATRIGUN / BETAGUN	Gun mixes ranging from super duty to high alumina with a non-wetting additive.
MATRIKOTE	Boron Nitride, zircon and high alumina coatings.
MATRIPHOS	Phosphate bonded plastics that contain an aluminum non-wetting additive.
QUICK-FIRE®	Two-component, phosphate bonded castables & gun mixes. Product ranges from 55% - 90% alumina.
NANO-TEK	No cement castable that can be shotcreted and pumped.
MATRIPUMP FF	Low cement castable that heats rapidly and can be shotcreted.

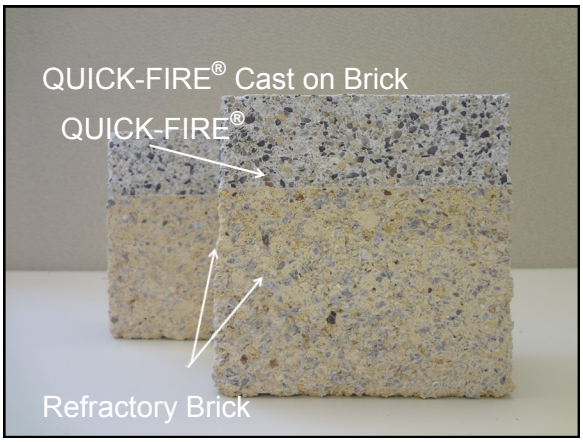

TECHNICAL DATA

Name	Al_2O_3 %	SiO_2 %	Density	Max. Temp
ARMORMAX® 70 SR	70.1	25.5	2.66 g/cm^3 (166 lb./ft^3)	1430°C (2600°F)
BETAMAX HS LT	50.6	29.0	1.37 g/cm^3 (85 lb./ft^3)	1290°C (2350°F)
BETAMAX 24 LT	42.4	39.7	1.23 g/cm^3 (77 lb./ft^3)	1345°C (2450°F)
BETMAX 26 LT	52.9	36.4	1.27 g/cm^3 (79 lb./ft^3)	1425°C (2600°F)
COIL-CAST 97A	96.6	0.1	3.03 g/cm^3 (189 lb./ft^3)	1650°C (3000°F)
INSULITE® 33100	94.5	0.4	1.60 g/cm^3 (100 lb./ft^3)	1815°C (3300°F)
DRI-CAST 581A	70	15	2.64 g/cm^3 (165 lb./ft^3)	1650°C (3000°F)
DRI-LITE® 65A-L	37.6	56.0	0.96 g/cm^3 (60 lb./ft^3)	1400°C (2550°F)
DRI-LITE® 79AL-M	42.9	49.1	1.31 g/cm^3 (82 lb./ft^3)	1370°C (2500°F)
DRI-VIBE® 520A	90.7	4.5	3.04 g/cm^3 (190 lb./ft^3)	1204°C (2200°F)
DRI-VIBE® 522A-FR	80.7	8.3	2.88 g/cm^3 (180 lb./ft^3)	1425°C (2600°F)
DRI-VIBE® 558A-FR	90.7	4.5	3.04 g/cm^3 (190 lb./ft^3)	1095°C (2000°F)
GROUT 163 ACF	91.0	3.1	2.51 g/cm^3 (160 lb./ft^3)	1760°C (3200°F)
GROUT 563A	86.1	4.8	2.72 g/cm^3 (170 lb./ft^3)	1760°C (3200°F)
GROUT 663A	87.6	4.4	2.72 g/cm^3 (170 lb./ft^3)	1760°C (3200°F)
KAST TECH 60	55.9	36.6	2.34 g/cm^3 (146 lb./ft^3)	1649°C (3000°F)
LCF 798A	61.5	35.0	2.64 g/cm^3 (165 lb./ft^3)	1705°C (3100°F)
MATRICAST 70 AC	69.1	25.1	2.58 g/cm^3 (161 lb./ft^3)	1540°C (2800°F)
MATRICAST 2600 AC	45.2	42.4	1.99 g/cm^3 (127 lb./ft^3)	1425°C (2600°F)
MATRICAST 3110C	60.0	32.2	2.39 g/cm^3 (149 lb./ft^3)	1705°C (3100°F)
MATRICAST SiC	63.2	20.0	2.59 g/cm^3 (162 lb./ft^3)	1760°C (3200°F)
MATRIFIRE 8085 ACX	78.6	8.8	2.79 g/cm^3 (174 lb./ft^3)	1315°C (2400°F)
MATRIFLO 85 ACX	85.6	8.5	2.74 g/cm^3 (171 lb./ft^3)	1540°C (2800°F)
MATRIFLO 93 AC	92.8	0.4	3.17 g/cm^3 (198 lb./ft^3)	1650°C (3000°F)
MATRIGUN 25 ACX	43.9	40.8	1.95 g/cm^3 (122 lb./ft^3)	1300°C (23700°F)
MATRIKOTE 90 AC	90.4	1.5	2.88 g/cm^3 (180 lb./ft^3)	1650°C (3000°F)

TECHNICAL DATA

Name	Al_2O_3 %	SiO_2 %	Density	Max. Temp
MATRIPHOS 85 AC	80.7	12.2	2.80 g/cm^3 (175 lb./ft^3)	1650°C (3000°F)
MATRIPUMP AR 61	60.8	34.2	2.47 g/cm^3 (154 lb./ft^3)	1650°C (3000°F)
MATRIPUMP 50	54.3	39.6	2.47 g/cm^3 (154 lb./ft^3)	1650°C (3000°F)
MATRIPUMP 63 ACX	65.6	28.5	2.59 g/cm^3 (162 lb./ft^3)	1540°C (2800°F)
MATRIPUMP 70 ACX	73.3	20.5	2.74 g/cm^3 (171 lb./ft^3)	1482°C (2700°F)
MATRIPUMP 72 ACX	78.6	15.6	2.68 g/cm^3 (167 lb./ft^3)	1540°C (2800°F)
MATRIPUMP 45 AL	47.0	46.9	2.35 g/cm^3 (147 lb./ft^3)	1370°C (2500°F)
MATRISIL CV	22.7	73.4	2.05 g/cm^3 (128 lb./ft^3)	1200°C (2200°F)
MATRISIL LC	20.3	76.3	2.05 g/cm^3 (128 lb./ft^3)	1370°C (2500°F)
MATRISIL SR	22.1	75.0	2.06 g/cm^3 (128 lb./ft^3)	1370°C (2500°F)
MINRO-AL® PLASTIC A76	67.3	25.7	2.69 g/cm^3 (168 lb./ft^3)	1650°C (3000°F)
MINRO-AL® PLASTIC A85	81.1	11.8	2.84 g/cm^3 (177 lb./ft^3)	1650°C (3000°F)
MINRO-FIRE CAST F80	53.2	39.3	2.24 g/cm^3 (140 lb./ft^3)	1650°C (3000°F)
MINRO-Z WASH Z77*	1.2	35.4	-	1650°C (3000°F)
QUICK CAST® 61 ACX	65.3	29.0	2.59 g/cm^3 (162 lb./ft^3)	1540°C (2800°F)
QUICK CAST® 62	66.1	27.2	2.64 g/cm^3 (165 lb./ft^3)	1705°C (3100°F)
PHOS FREE PLASTIC F	88.2	10.2	2.90 g/cm^3 (181 lb./ft^3)	1730°C (3150°F)
QUICK CAST® 81 ACX	76.7	18.7	2.74 g/cm^3 (171 lb./ft^3)	1540°C (2800°F)
QUICK-FIRE® PATCH B	78.5	10.0	2.53 g/cm^3 (158 lb./ft^3)	1650°C (3000°F)
QUICK-FIRE® PATCH M	62.7	26.2	2.33 g/cm^3 (145 lb./ft^3)	1650°C (3000°F)
QUICK-FIRE® 88	88.2	3.9	2.84 g/cm^3 (177 lb./ft^3)	1650°C (3000°F)
QUICK-FIRE® 90	89.2	2.1	2.90 g/cm^3 (181 lb./ft^3)	1700°C (3100°F)
TUFF-FLO 608	32.7	24.6	2.60 g/cm^3 (162 lb./ft^3)	1650°C (3000°F)
TUFFLOOR	35.1	42.5	2.11 g/cm^3 (132 lb./ft^3)	1040°C (1900°F
WASH 148A	91.7	5.8	-	1700°C (3092°F)

* ZrO_2 55.0%

© 2018 Allied Mineral Products, Inc.
Revised 2/18

Headquarters:

Allied Mineral Products, Inc.
Columbus, Ohio, U.S.A.
614-876-0244 - info@alliedmin.com

USA Manufacturing Locations:

Allied Mineral Products, Inc.
Columbus, Ohio, USA
614-876-0244 - info@alliedmin.com

Allied Mineral Products
Chehalis, Washington, USA
614-876-0244 - info@alliedmin.com

Allied Mineral Products
Anniston, Alabama, USA
614-876-0244 - info@alliedmin.com

Allied Mineral Products
Pell City, Alabama, USA
614-876-0244 - info@alliedmin.com

Allied Mineral Products
Brownsville, Texas, USA
956-831-2022 - info@alliedmin.com

International Manufacturing Locations:

Allied Mineral Products Brazil
Poços de Caldas, Brazil
614-876-0244 - info@alliedmin.com

Allied Mineral Products Europe B.V.
Tholen, Netherlands
31-166 601200 - customer.service@alliedmin.com

Allied Mineral Products (Foshan) Co., Ltd.
Foshan City, China
86-22-252-10378 - amtsales@alliedmin.com

Allied Mineral Products (Tianjin) Co., Ltd.
Tianjin, China
86-22-252-10378 - amtsales@alliedmin.com

Allied Mineral Products South Africa (Pty) Ltd.
Johannesburg, South Africa
27-11-902-2900 - southafricasales@alliedmin.com

Allied Refractory Products India Private Ltd.
Ahmedabad, Gujarat, India
91-2717-616800 - india@alliedmin.com

Allied Mineral Products Russia
Yelabuga, Tatarstan, Russia
79-16-585-2753 - info@alliedmin.com

Licensees:

Refractarios Iunge Limitada
Santiago, Chile
56-22-745-3613 - info@alliedmin.com

Nippon Crucible Co., Ltd.
Tokyo, Japan
614-876-0244 - japan@alliedmin.com

Shinagawa Refractories Australasia
Unanderra NSW Australia
+61-2-4222-3834 - info@alliedmin.com

Hagenburger
Grünstadt, Germany
31-16660-5153 - info@alliedmin.com

Visit **alliedmineral.com** for more information.